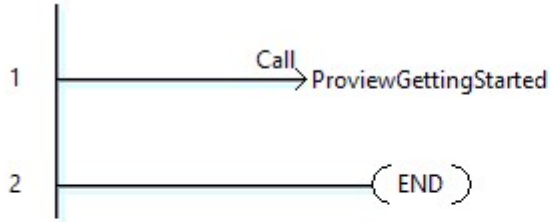
1
Call
ProviewGettingStarted
2
END

These two rungs copy the functionality provided in the Proview Soft PLC to demonstrate equivalent functionality in a slave PLC

1

PLCDv14 C1846 — PLCDv15 C1847 — PLCDv16 C1848

Timer(ON Delay) T17
Current Value Not Retained
Unit sec
Enable
SetPoint 5
Current TD17
Output → T17

2

T17 — PLCDi12 C1812 OUT

***** Radio Button Selection - Example Code *****
Set a default if no radio selection is made i.e. default is PLCCoil04 (PLCDv04)

3

PLCDv04 C1836 — PLCDv05 C1837 — PLCDv06 C1838 — PLCDv07 C1839 — PLCDv04 C1836 SET

On Rising Edge of radio button selection set and unset bits appropriately (Typical for 1 of 4)

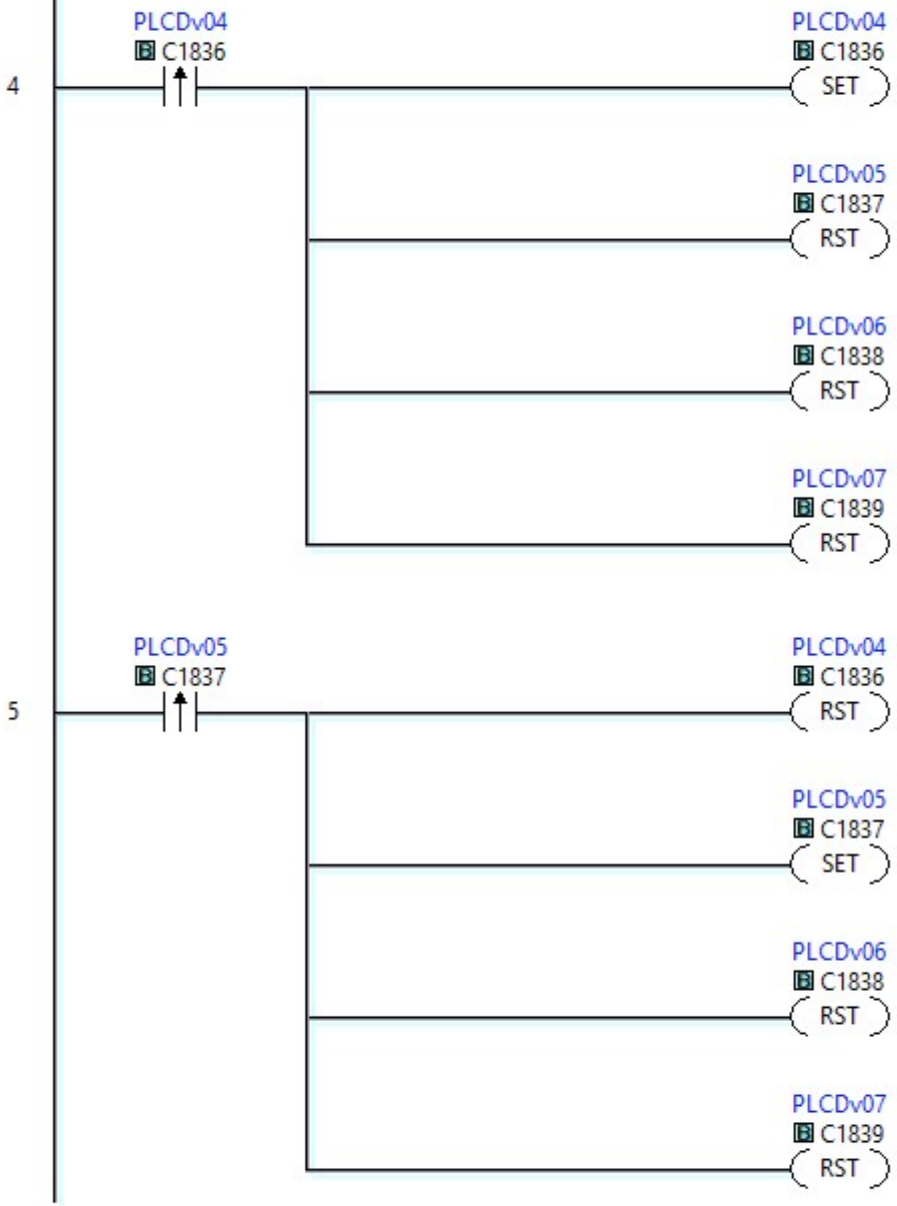

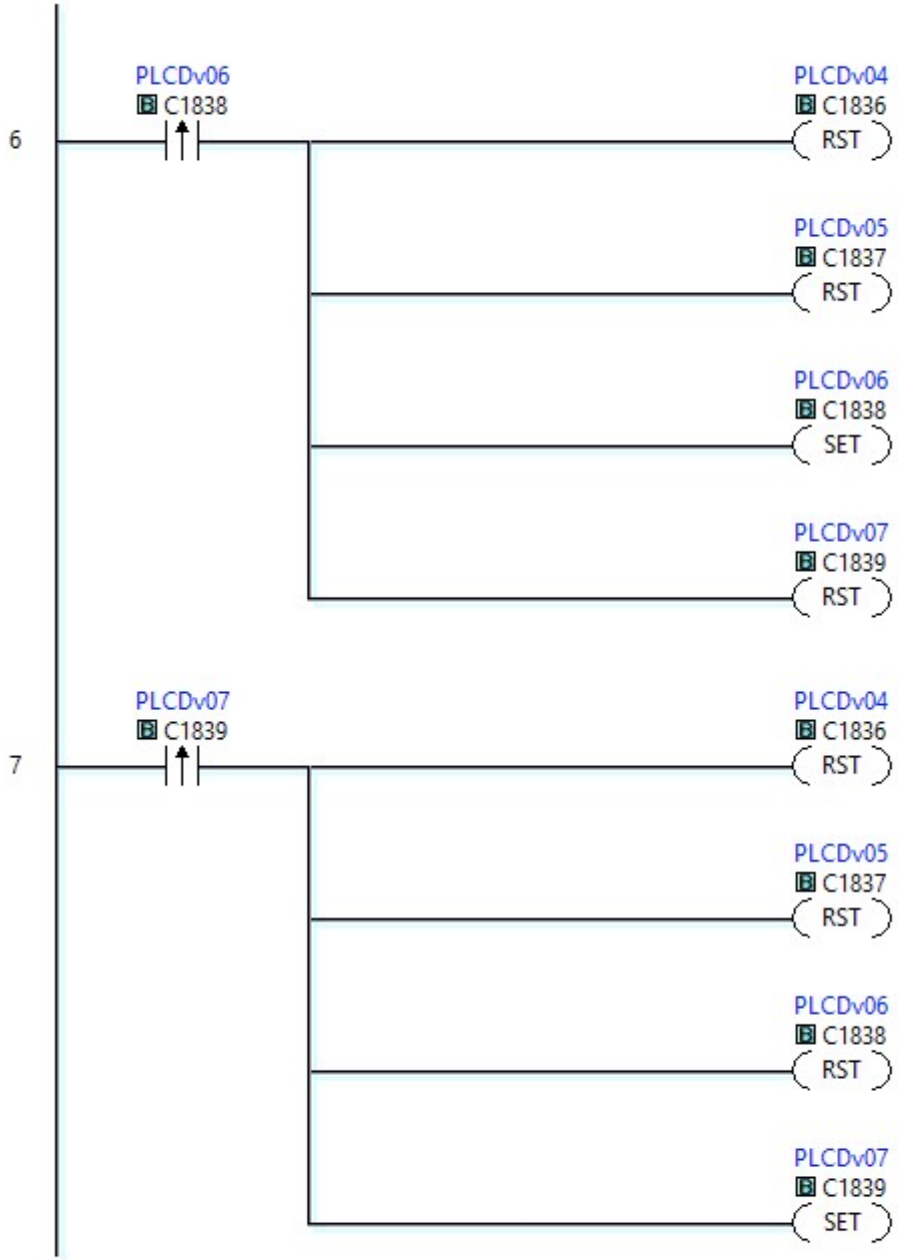
6
PLCDv06
C1838
PLCDv04
C1836
RST
PLCDv05
C1837
RST
PLCDv06
C1838
SET
PLCDv07
C1839
RST
7
PLCDv07
C1839
PLCDv04
C1836
RST
PLCDv05
C1837
RST
PLCDv06
C1838
RST
PLCDv07
C1839
SET

Safeguarding code to ensure that two or more radio buttons cannot be left on (for example if bits were set when PLC was in stop or before code started. Allows the condition to occur for one program scan in case SCADA write manges to occur between rungs above and this one (although unikely)

8

PLCDv04 C1836 — PLCDv05 C1837

PLCDv04 C1836 — PLCDv06 C1838

PLCDv04 C1836 — PLCDv07 C1839

PLCDv05 C1837 — PLCDv06 C1838

PLCDv05 C1837 — PLCDv07 C1839

PLCDv06 C1838 — PLCDv07 C1839

Counter CT2

SetPoint 2

Current CTD2

Up

Complete — CT2

PLCDv04 C1836 — PLCDv05 C1837 — PLCDv06 C1838 — PLCDv07 C1839

PLCDv04 C1836 — PLCDv05 C1837 — PLCDv06 C1838 — PLCDv07 C1839

Reset

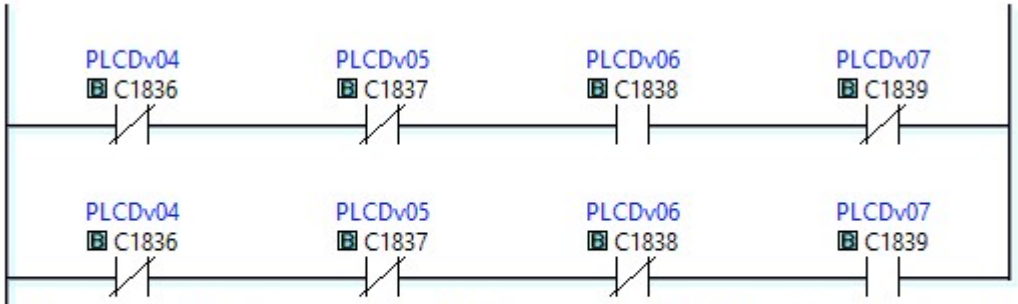

If Counter reaches two - reset all radio buttons and default will be selected at first radio selection rung above

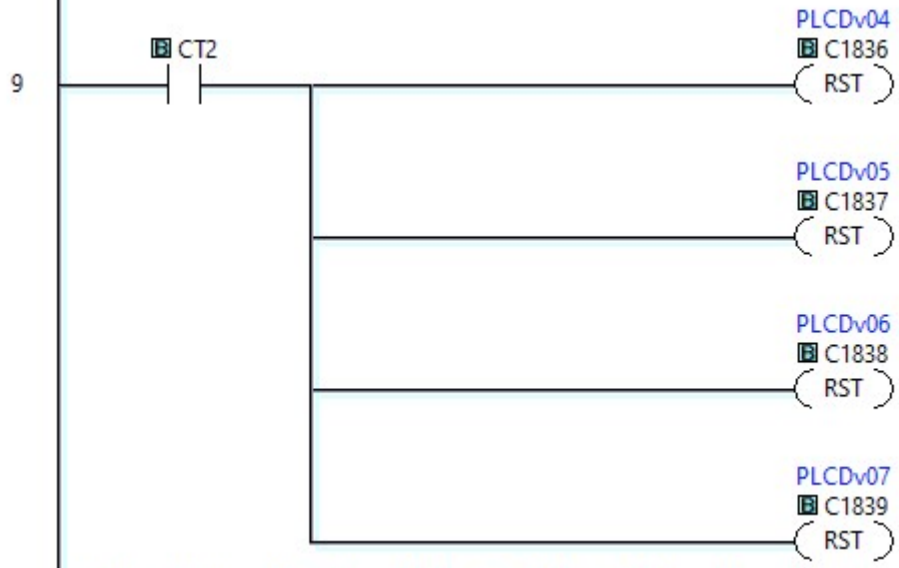

**** Start / Stop / Run Example Code with Interlocking / Run Conditions ****
Note that supervisory stop start commands are immediately unlatched in the PLC after use

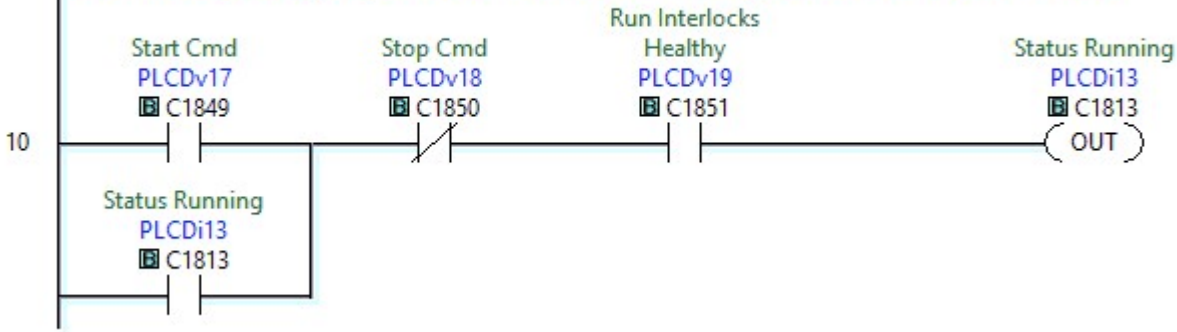

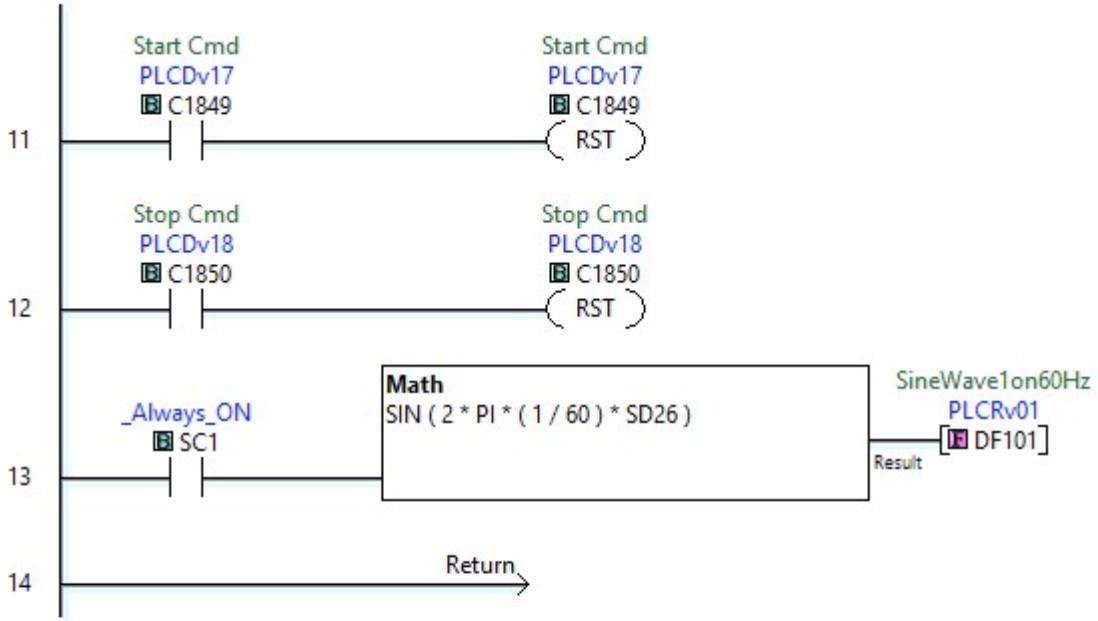
11
Start Cmd
PLCDv17
C1849
Start Cmd
PLCDv17
C1849
RST
12
Stop Cmd
PLCDv18
C1850
Stop Cmd
PLCDv18
C1850
RST
13
_Always_ON
SC1
Math
SIN (2 * PI * (1 / 60) * SD26)
Result
SineWave1on60Hz
PLCRv01
DF101
14
Return